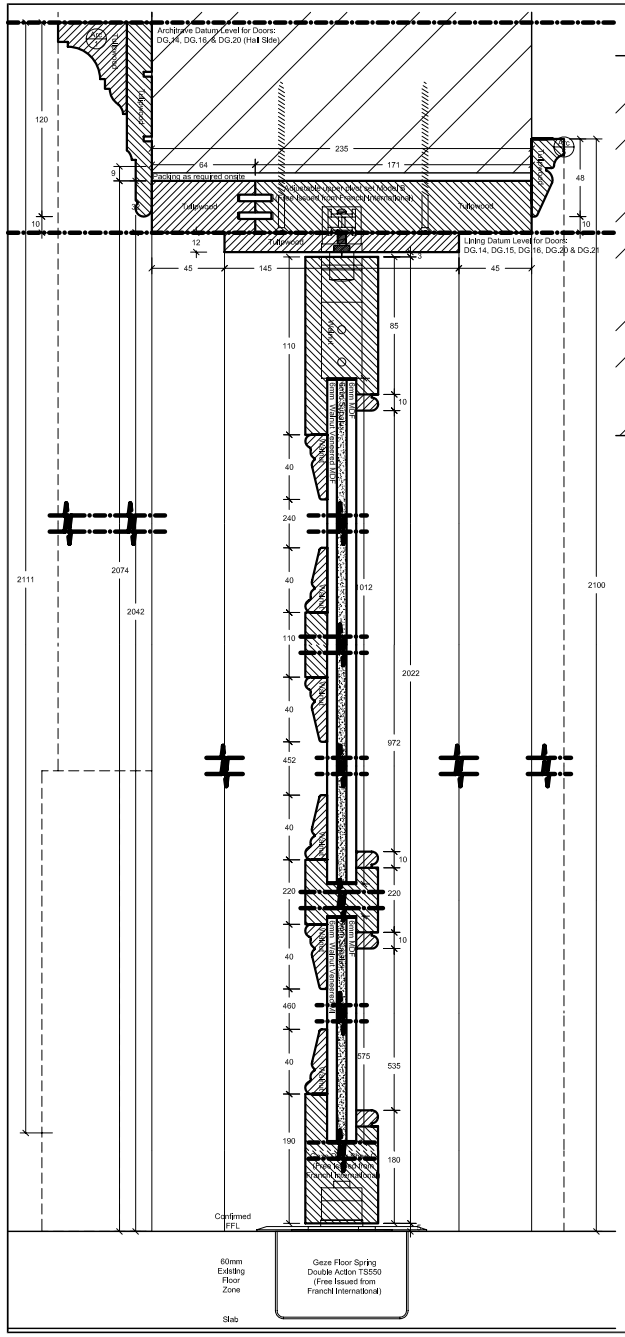
Architrave Datum Level for Doors:
DG.14, DG.16 & DG.20 (Hall Side)
Lining Datum Level for Doors:
DG.14, DG.15, DG.16, DG.20 & DG.21
Ceiling as required onsite
Confirmed FFL
60mm Existing Floor Zone
Geze Floor Spring Double Action TS550 (Free Issued from Franchi International)
Slab

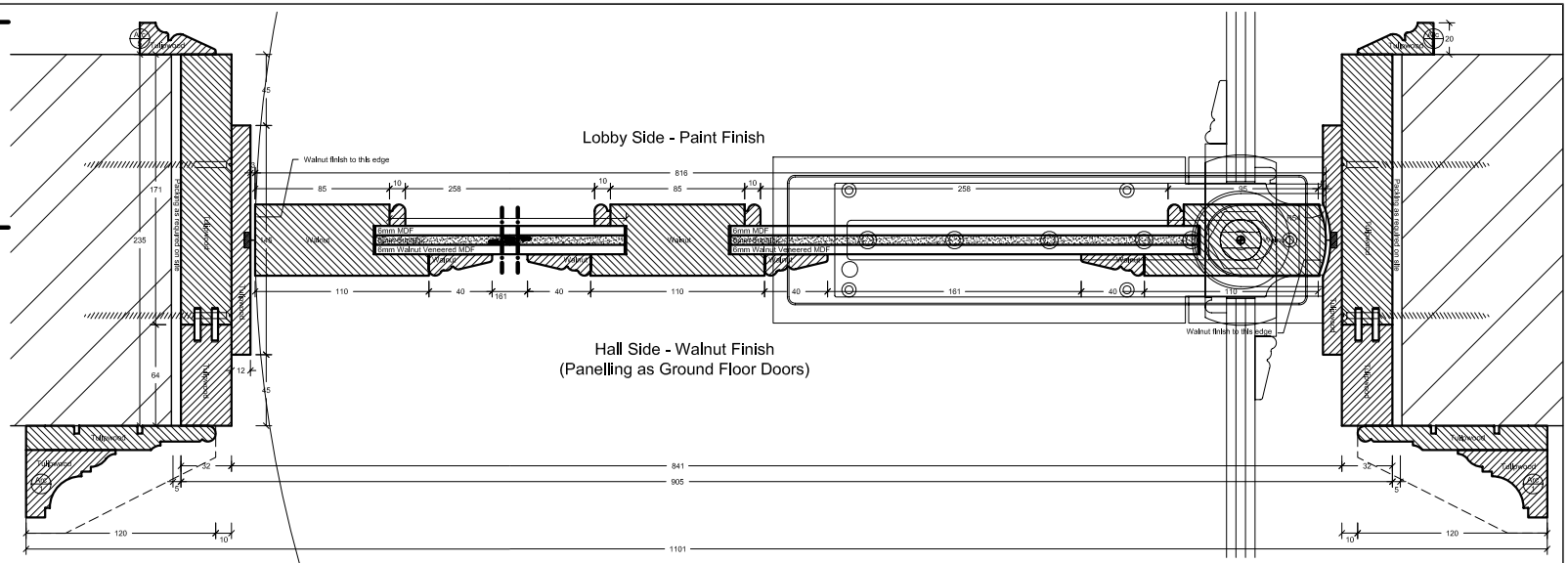
Lobby Side - Paint Finish
Walnut finish to this edge
6mm MDF
6mm Walnut Veneered MDF
Hall Side - Walnut Finish
(Panelling as Ground Floor Doors)

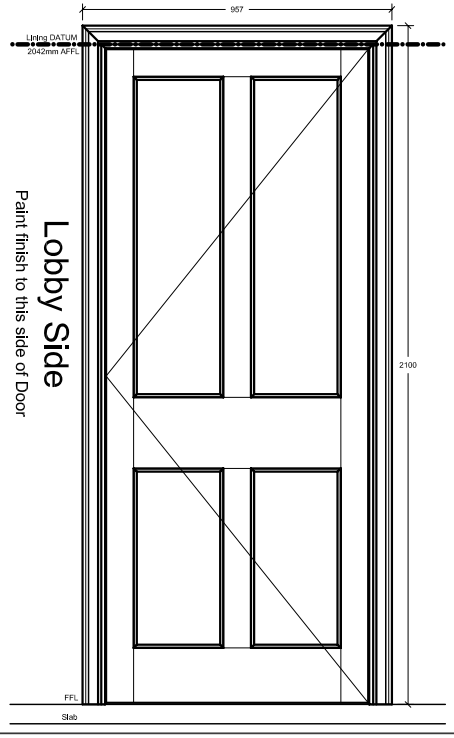
Lining DATUM
2042mm AFFL
Lobby Side
Paint finish to this side of Door
FFL
Slab

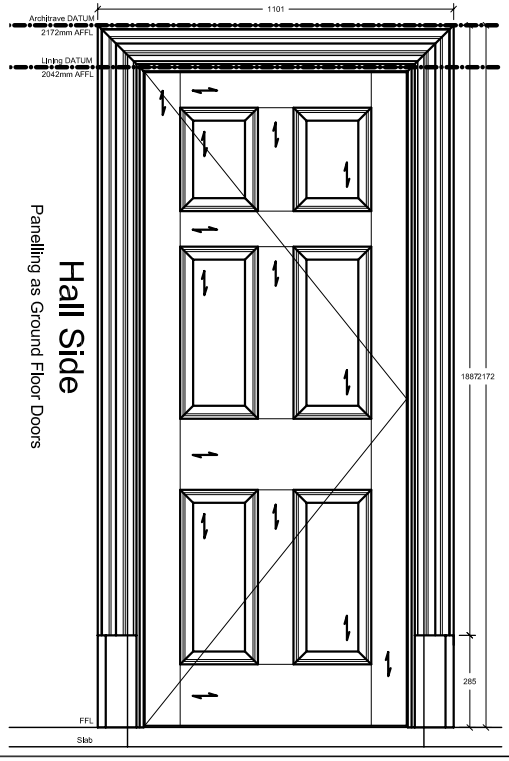
Architrave DATUM
2172mm AFFL
Lining DATUM
2042mm AFFL
Hall Side
Panelling as Ground Floor Doors
FFL
Slab

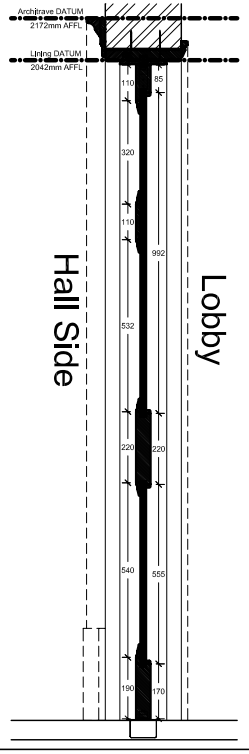
Architrave DATUM
2172mm AFFL
Lining DATUM
2042mm AFFL
Hall Side
Lobby